Nuffield and Leyland Tractor Parts

5x2 10 Speed Gearbox

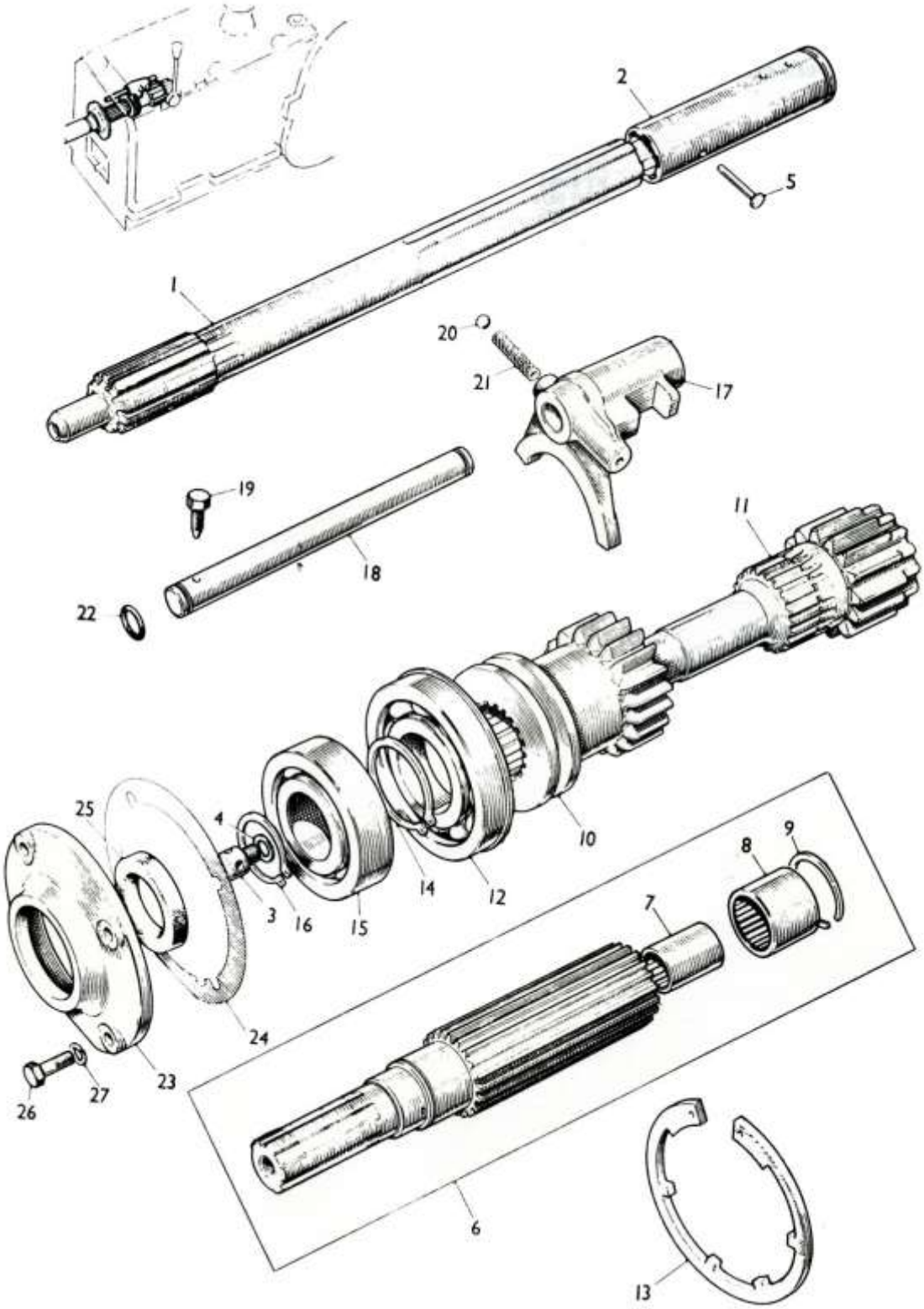

18 – ATJ7900 Shaft
19 – ATJ7901 Pin
19 – NT5798 PIN
20 – BLS110 Ball
21 – ATJ103 Spring
22 – TRS0710 O-Ring
23 – ATJ7521 Cover
24 – ATJ7522 Joint
24 – ATJ7774 Joint
25 – 3H2129 Seal
25 – ATJ2123 Seal
26 – HNS0510 Screw
27 – LWN205 Washer